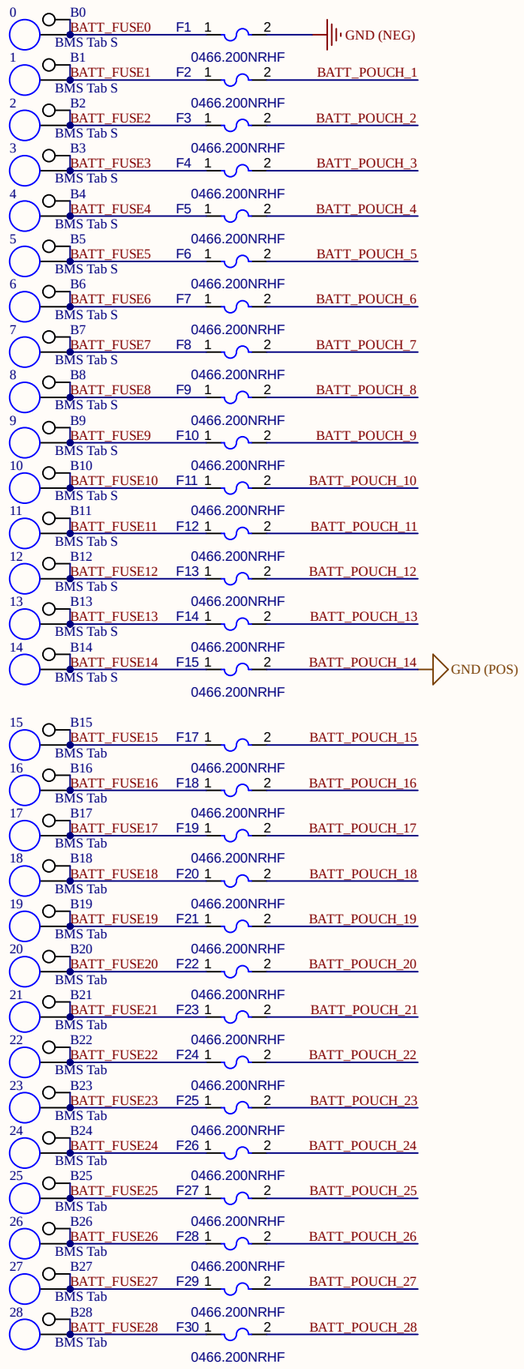

Battery Management Cells 15-28

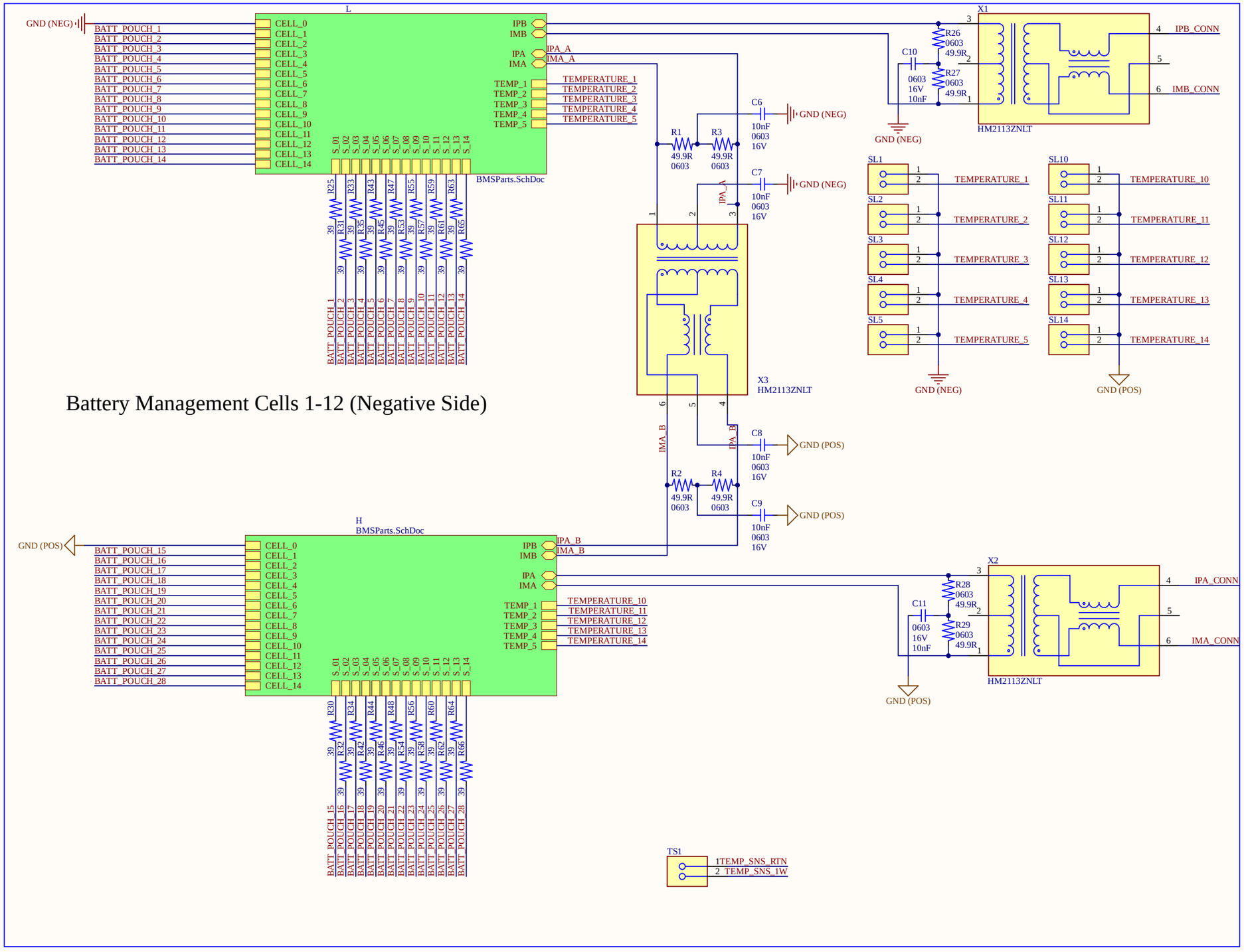

Battery Management Cells 1-12 (Negative Side)

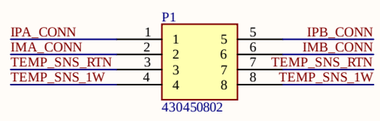

isoSPI COMMs

THE UNIVERSITY OF AKRON

ZIPS RACING ELECTRIC THE UNIVERSITY OF AKRON

SHEET SIZE	TITLE	PART NUMBER	REVISION
ANSI B	=ProjectTitle	=PartNumber	=Re
	LAST UPDATE 1/26/2026 8:24:23 PM	SHEET 1 of 2	

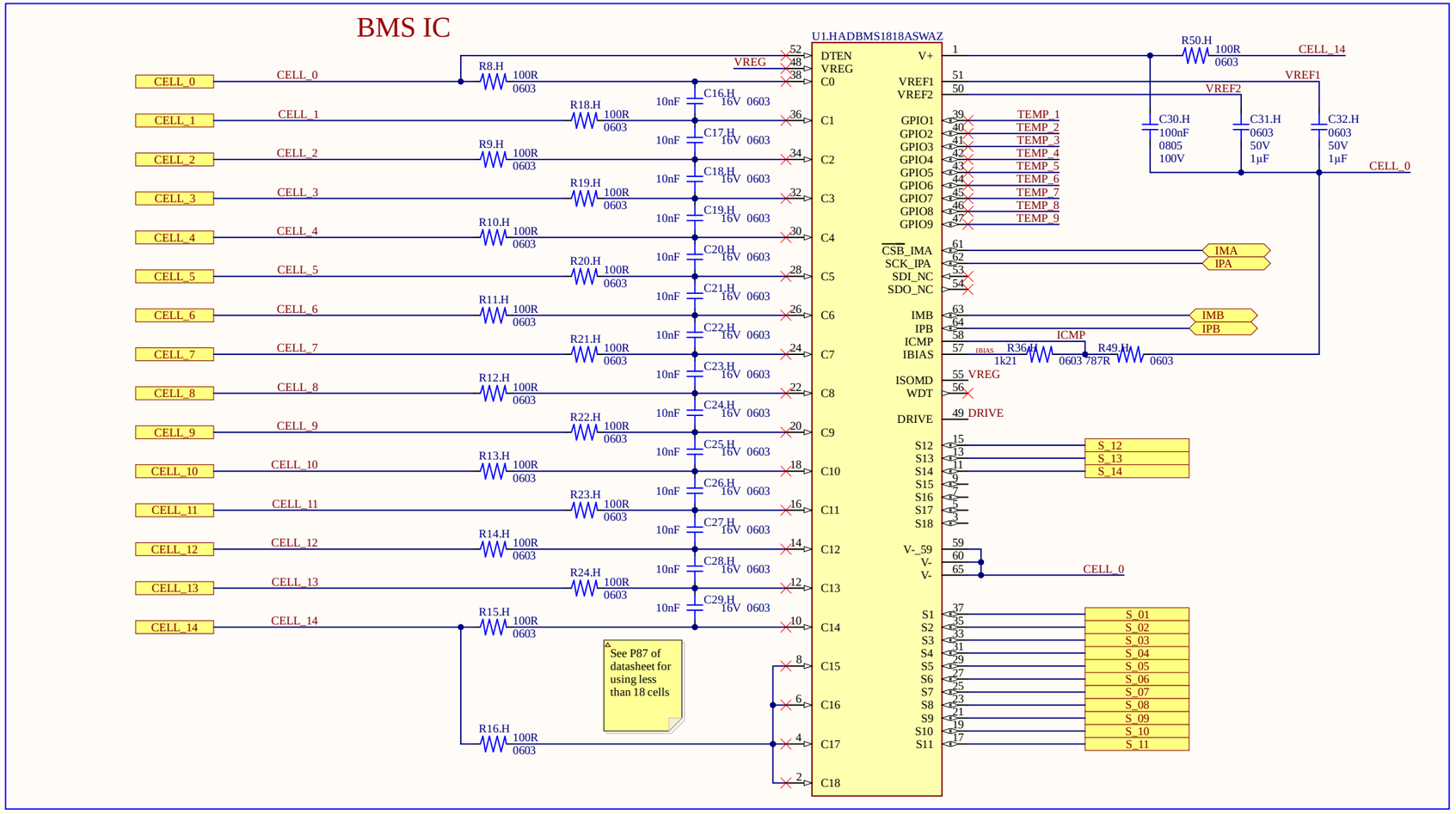

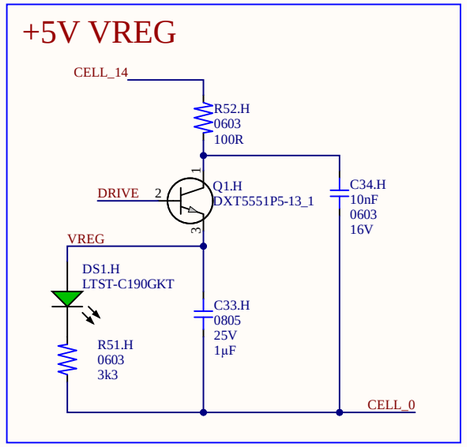

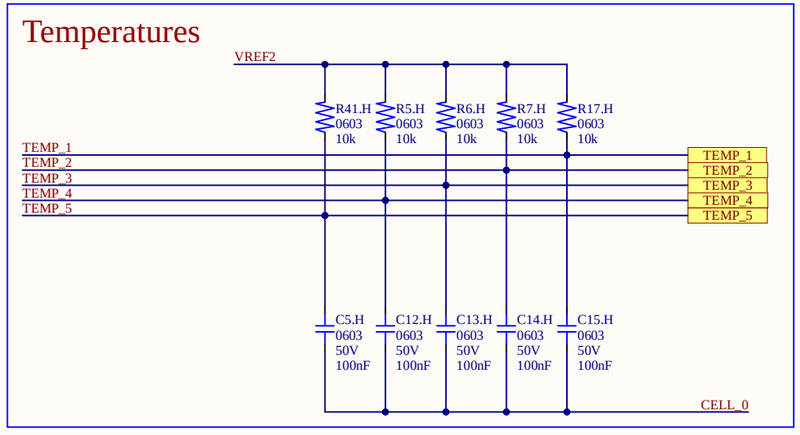

THE UNIVERSITY OF AKRON

SHEET SIZE	TITLE	PART NUMBER	REVISION
ANSI B	=ProjectTitle	=PartNumber	=Re
	LAST UPDATE 1/26/2026 8:24:24 PM	SHEET 2 of 2	

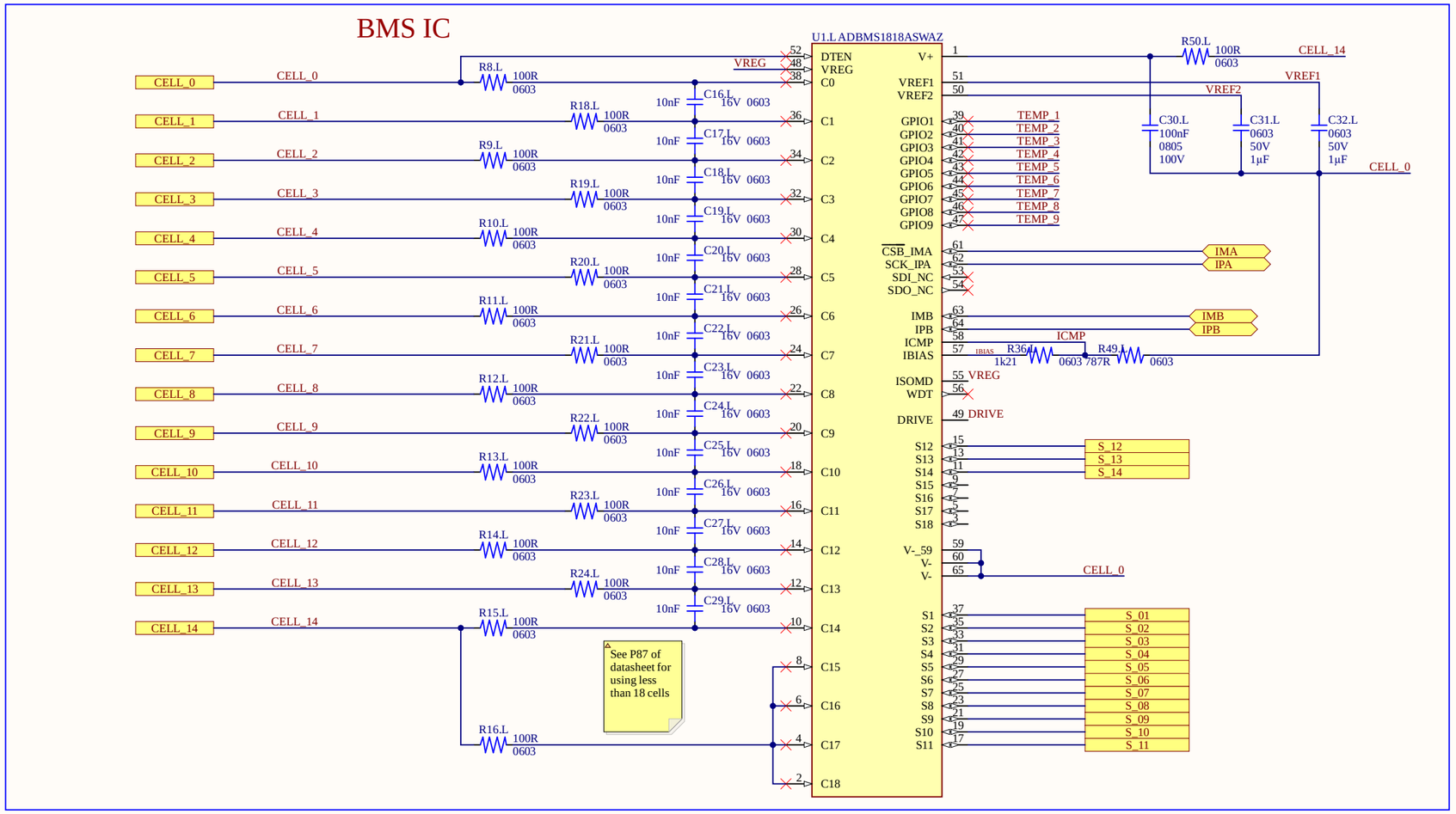

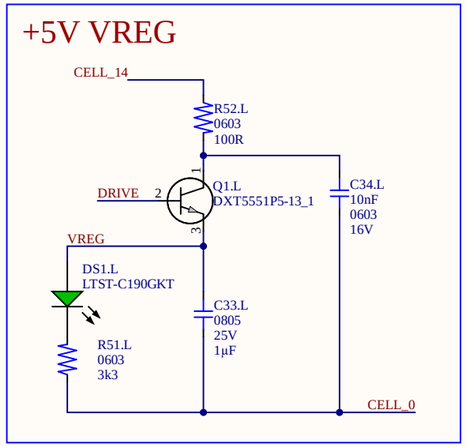

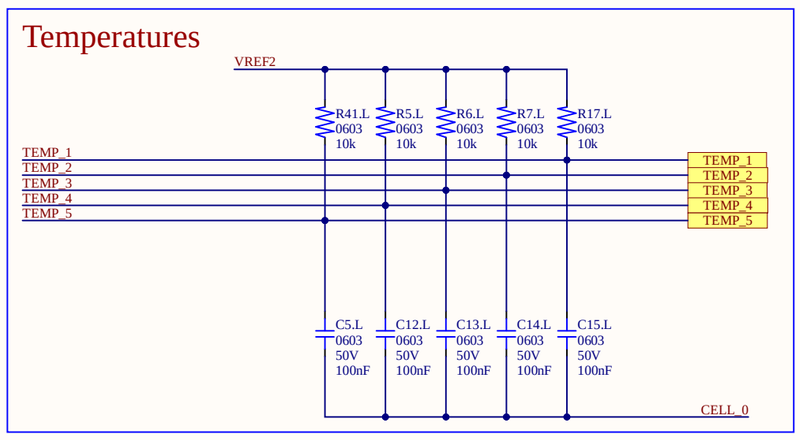

THE UNIVERSITY OF AKRON

ZIPS RACING ELECTRIC THE UNIVERSITY OF AKRON

SHEET SIZE	TITLE	PART NUMBER	REVISION
ANSI B	=ProjectTitle	=PartNumber	=Re
	LAST UPDATE 1/26/2026 8:24:24 PM	SHEET 2 of 2	